STEEL Mini 3,5 - ART. 4744103010233
STEEL 6 - ART. 4744103010264
STEEL 9 - ART. 4744103010295
STEEL 10,5 - ART. 4744103011209

Electric heater
STEEL

STEEL is a slim electric sauna heater with remarkably small safety distances, which makes it perfect for saunas with limited spaces. The internal air tunnel placed in the center of the heater provides effective airflow, speeds up the heating process by 25% and prolongs the lifespan of the heating elements.

STEEL Mini comes in a slimmer 3,5 kW wall-mounted model which is particularly suitable for very small sauna rooms.







Stainless Steel | CE Certification | Safety & Control | Made in Estonia

© ALL RIGHTS RESERVED - HUUM 2021

HEATER STEEL	3,5 kW	6 kW	9 kW	10,5 kW
Sauna room	3.5-6 m³	6-10 m³	9-15 m³	10-17 m³
Stone capacity	60 kg	150 kg	150 kg	150 kg
Weight	14,5 kg	15 kg	15 kg	16 kg
Height	975 mm	975 mm	975 mm	975 mm
Width	320 mm	320 mm	320 mm	320 mm
Depth	150 mm	320 mm	320 mm	320 mm
POWER				
Fuse	16 A	10 A	16 A	16 A
Supply voltage 3-phase	-	400 V 3N	400 V 3N	400 V 3N
Cable (N x mm²)	-	5 x 1,5	5 x 2,5	5 x 2,5
Supply voltage 1-phase	230 V 1N	-	-	-
Cable (N x mm²)	3 x 2,5	-	-	-

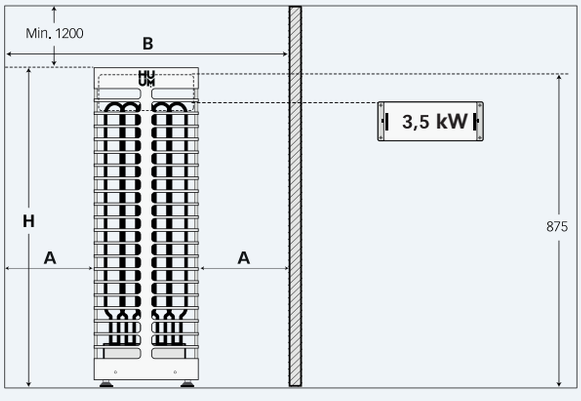

SAFETY DISTANCES

A	50 mm	50 mm	100 mm	100 mm
B	420 mm	420 mm	520 mm	520 mm

DISTRIBUTOR:

DELIVERY TIME / TERMS AND CONDITIONS (TO BE AGREED WHEN PLACING AN ORDER)

OF SAUNA

huum.eu