RUND
90/C2 VITAL

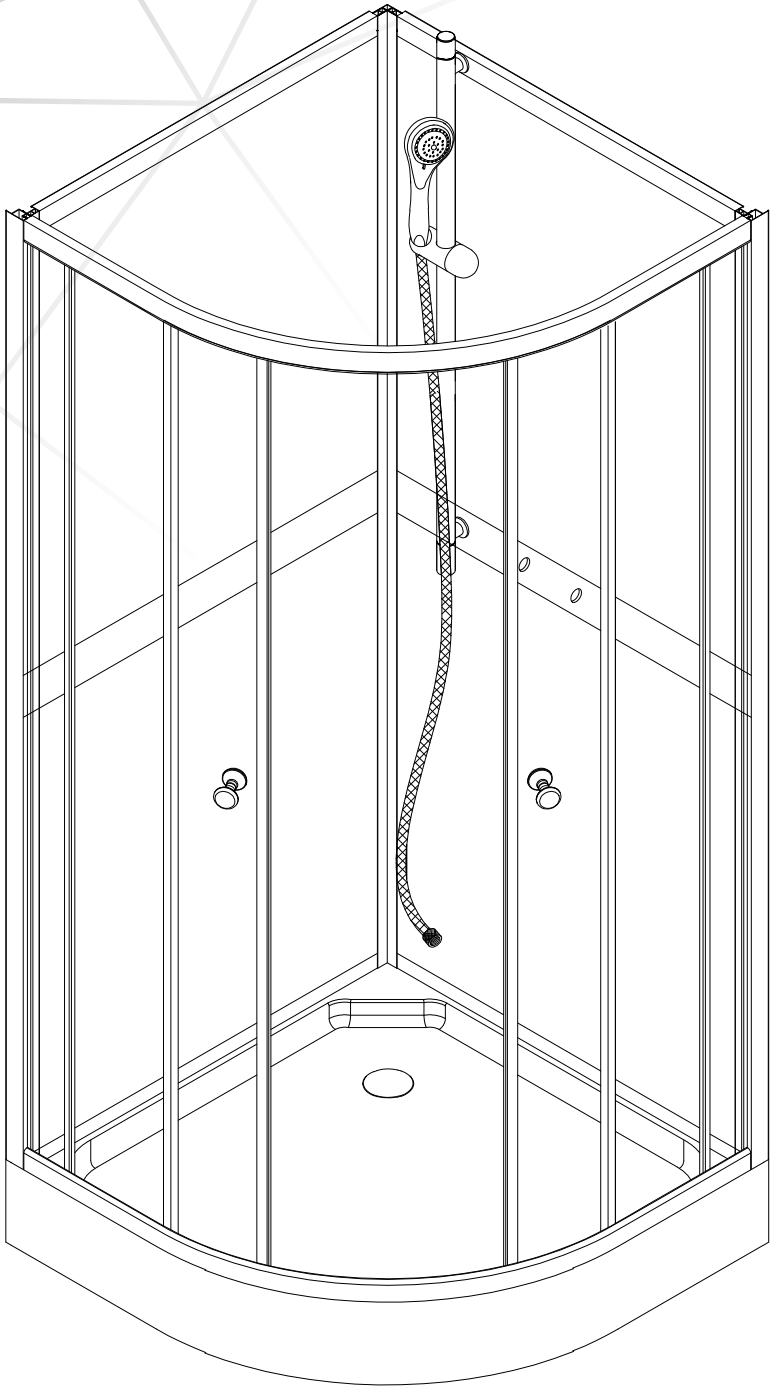

EN 14428:2015 (2021-03-25)

bathlife®
OF SWEDEN

Copyright ©2021 Bygghemma Sverige AB. Original content rights reserved. All product names, logos, and brands are property of their respective owners.

Information contained within this document was considered accurate at the time of publication, but may be subject to revision.

EN TABLE OF CONTENTS
SV INNEHÅLLSFÖRTECKNING
NO INNHOLDSFORTEGNELSE
DK INDHOLDFORTEGNELSE
FI SISÄLLYSLUETTELO

Maintenance/skötsel/vedlikehold/vedligeholdelse/hoito 3

Connection/anslutning/forbindelse/yhteys 4

Tools/verktyg/verktøy/værktøjer/työkalut 5

Components/komponenter/komponentit 6

Assembly/montering/montage/kokoonpano 10

Copyright ©2021 Bygghemma Sverige AB. Original content rights reserved. All product names, logos, and brands are property of their respective owners.

Information contained within this document was considered accurate at the time of publication, but may be subject to revision.

EN **If you have questions**, please contact us.
SV **Om du har frågor**, vänligen kontakta oss.
NO **Hvis du har spørsmål**, om produktet eller manualen.
DK **Hvis du har spørgsmål**, til dette produkt eller manual.
FI **Jos sinulla on kysyttävää**, ota yhteyttä.

EN **If any part is broken**, do not use the product before repairing it.
SV **Om någon del är defekt**, åtgärda detta innan produkten brukas.
NO **Hvis noen del er ødelagt**, ikke bruke produktet før reparasjoner.
DK **Hvis nogen del er brudt**, ikke bruge produktet før du reparerer det.
FI **Jos jokin osa on rikki**, älä käytä tuotetta ennen sen korjaamista.

EN **When cleaning**, do not use bleaching or abrasive chemicals.
SV **Vid rengöring**, använd inte blekande eller slipande kemikalier.
NO **Ved rengjøring**, ikke bruk blekemidler eller slitende kjemikalier.
DK **Ved rengøring**, brug ikke blegemidler eller slibende kemikalier.
FI **Kun puhdistat**, älä käytä valkaisu- tai hankaavia kemikaaleja.

EN Wet surfaces slippery
SV Våta ytor halkiga
NO våte overflater glatte
DK våde overflader glatte
FI Märkä pinta liukas

EN Do not overheat water
SV Överhetta ej vattnet
NO Ikke overopphetende vann
DK Overophed ikke vand
FI Älä ylikuumentaa vettä

EN Notice height differences
SV Tänk på höjdskillnader
NO Tenk på høydeforskjeller
DK Tænk på højdeforskelle
FI Ajattele korkeuseroja

EN Notice pinching risks
SV Tänk på klämrisker
NO Tenk på klemt risiko
DK Tænk på at klemme risici
FI Ajattele riskien puristamista

EN Keep carton indoors
SV Förvara lådan inomhus
NO Hold boksen innendørs
DK Hold kassen indendørs
FI Pidä laatikko sisätiloissa

Copyright ©2021 Bygghemma Sverige AB. Original content rights reserved. All product names, logos, and brands are property of their respective owners.

Information contained within this document was considered accurate at the time of publication, but may be subject to revision.

EN **Hire licensed professionals** when appropriate.
SV **Anlita licensierade hantverkare** när så krävs.
NO **Leie lisensierte lisensierte fagfolk** når det er nødvendig.
DK **Leje licenserede autoriserede fagfolk** når det kræves.
FI **Vuokraa llisensoidut ammattilaiset** tarvittaessa.

EN **Do not use/maintain with dirty water**. Filter when necessary.
SV **Använd/underhåll inte med smutsigt vatten**. Filtrera vid behov.
NO **Ikke bruk/vedlikehold med skittent vann**. Filter når nødvendig.
DK **Icke brug/vedligehold med snavset vand**. Filtrer når nødvendigt.
FI **Älä käytä/säilytä likaa vettä**. Suodata tarvittaessa.

Copyright ©2021 Bygghemma Sverige AB. Original content rights reserved. All product names, logos, and brands are property of their respective owners.

Information contained within this document was considered accurate at the time of publication, but may be subject to revision.

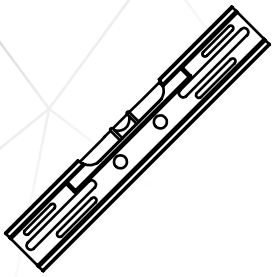

EN Spirit-level
SV Vattenpass
NO Vaterpass
DK Vaterpas
FI Vatupassi

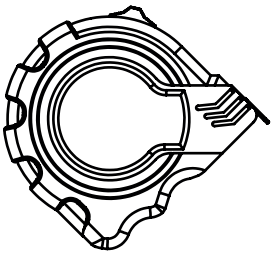

EN Measure tape
SV Måttband
NO Måletape
DK Målebånd
FI Iskuporakone

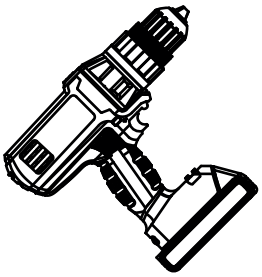

EN Drill
SV Borr
NO Bor
DK Bore
FI Porakone

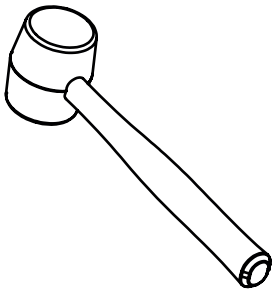

EN Hammer
SV Hammare
NO Hammer
DK Hammer
FI Mlotek

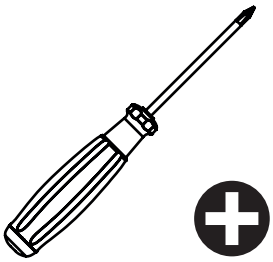

EN Screw Driver
SV Skruvmejsel
NO Skrutrekker
DK Skruetrækker
FI Ruuvimeisseli

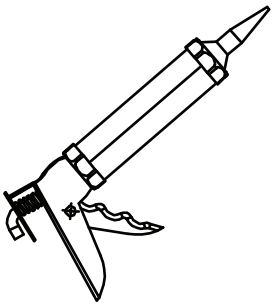

EN Glue gun
SV Limpistol
NO Limpistol
DK Limpistol
FI Limpistol

Copyright ©2021 Bygghemma Sverige AB. Original content rights reserved. All product names, logos, and brands are property of their respective owners.

Information contained within this document was considered accurate at the time of publication, but may be subject to revision.

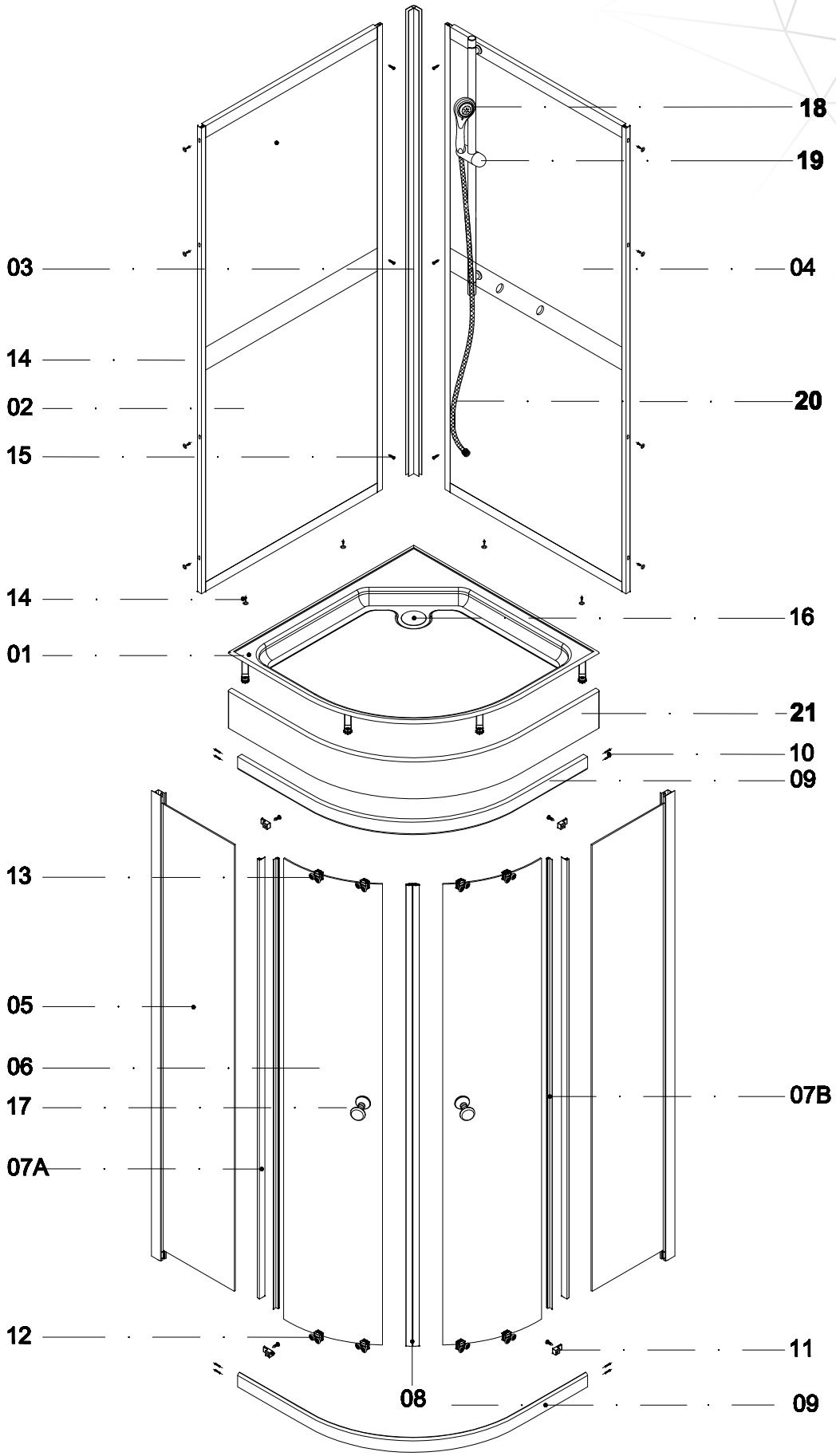

Copyright ©2021 Bygghemma Sverige AB. Original content rights reserved. All product names, logos, and brands are property of their respective owners.

Information contained within this document was considered accurate at the time of publication, but may be subject to revision.

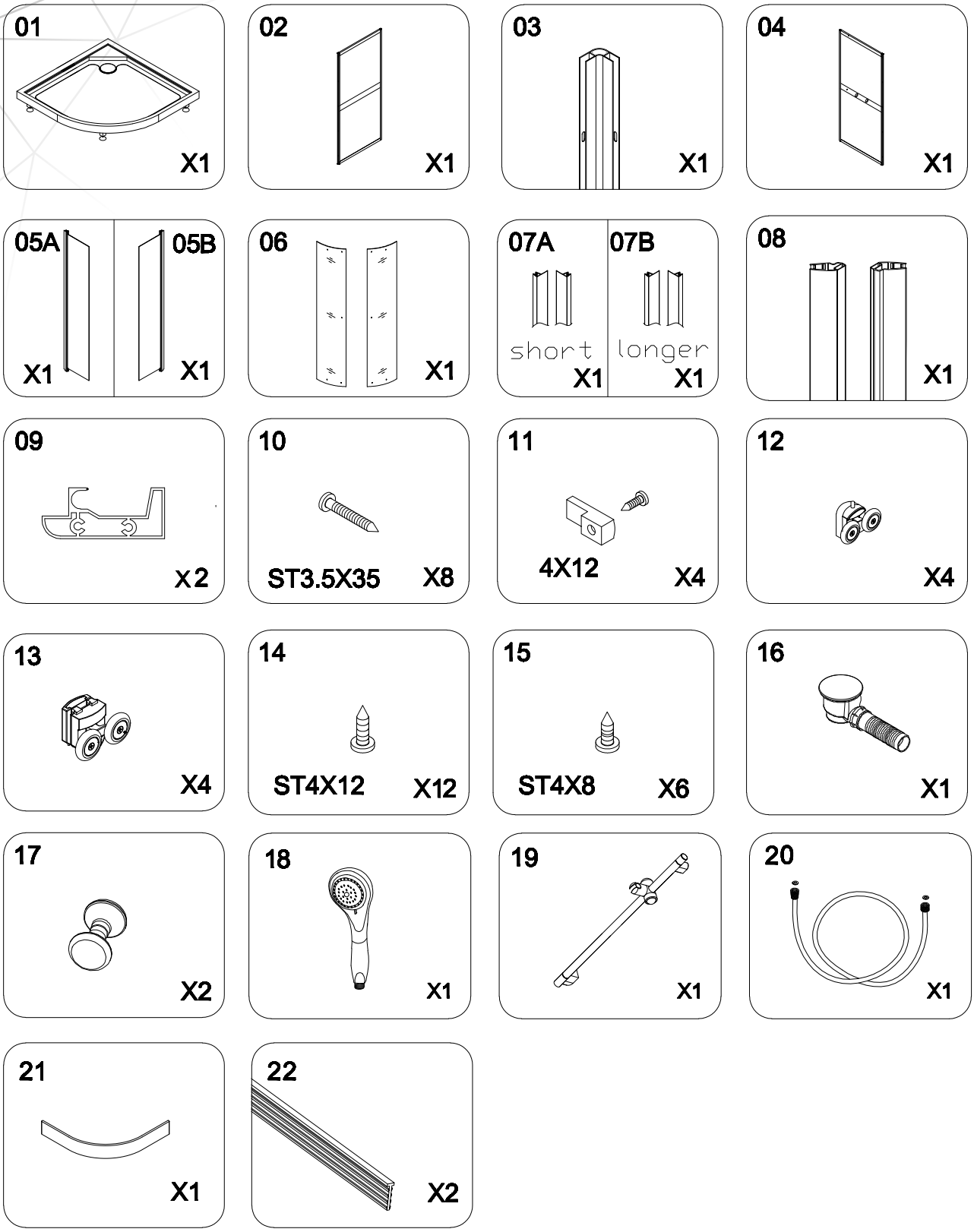

Copyright ©2021 Bygghemma Sverige AB. Original content rights reserved. All product names, logos, and brands are property of their respective owners.

Information contained within this document was considered accurate at the time of publication, but may be subject to revision.

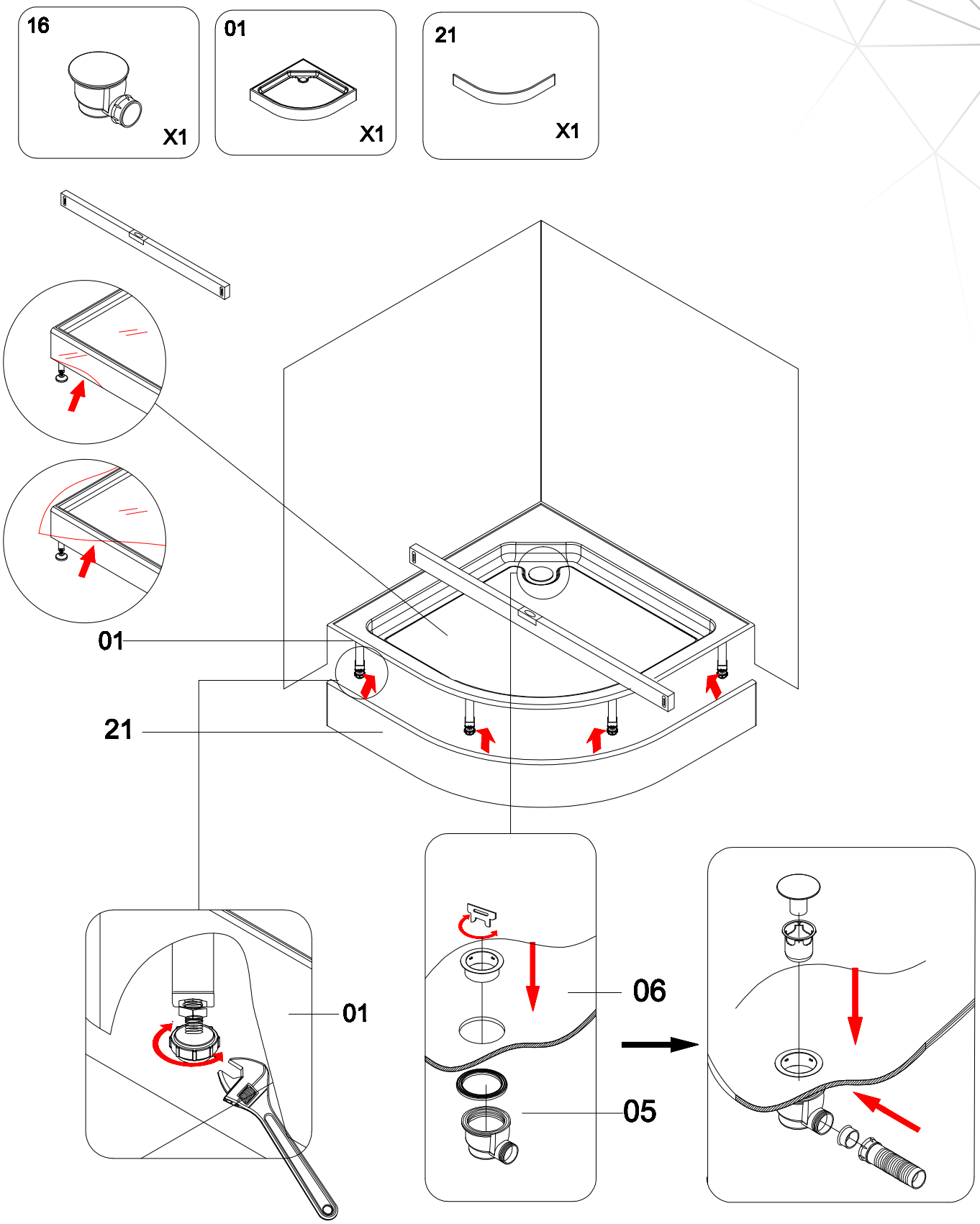

Copyright ©2021 Bygghemma Sverige AB. Original content rights reserved. All product names, logos, and brands are property of their respective owners.

Information contained within this document was considered accurate at the time of publication, but may be subject to revision.

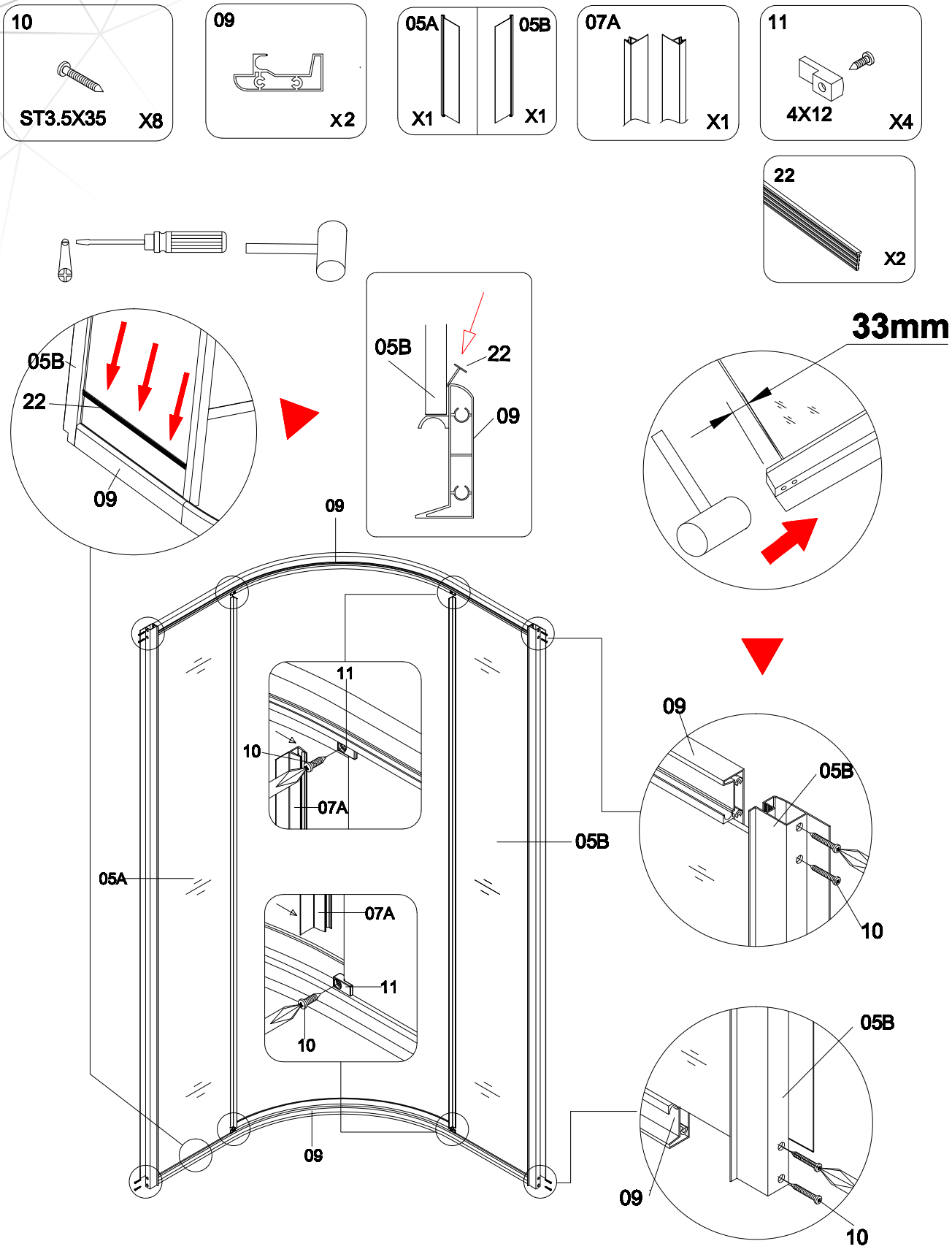

Copyright ©2021 Bygghemma Sverige AB. Original content rights reserved. All product names, logos, and brands are property of their respective owners.

Information contained within this document was considered accurate at the time of publication, but may be subject to revision.

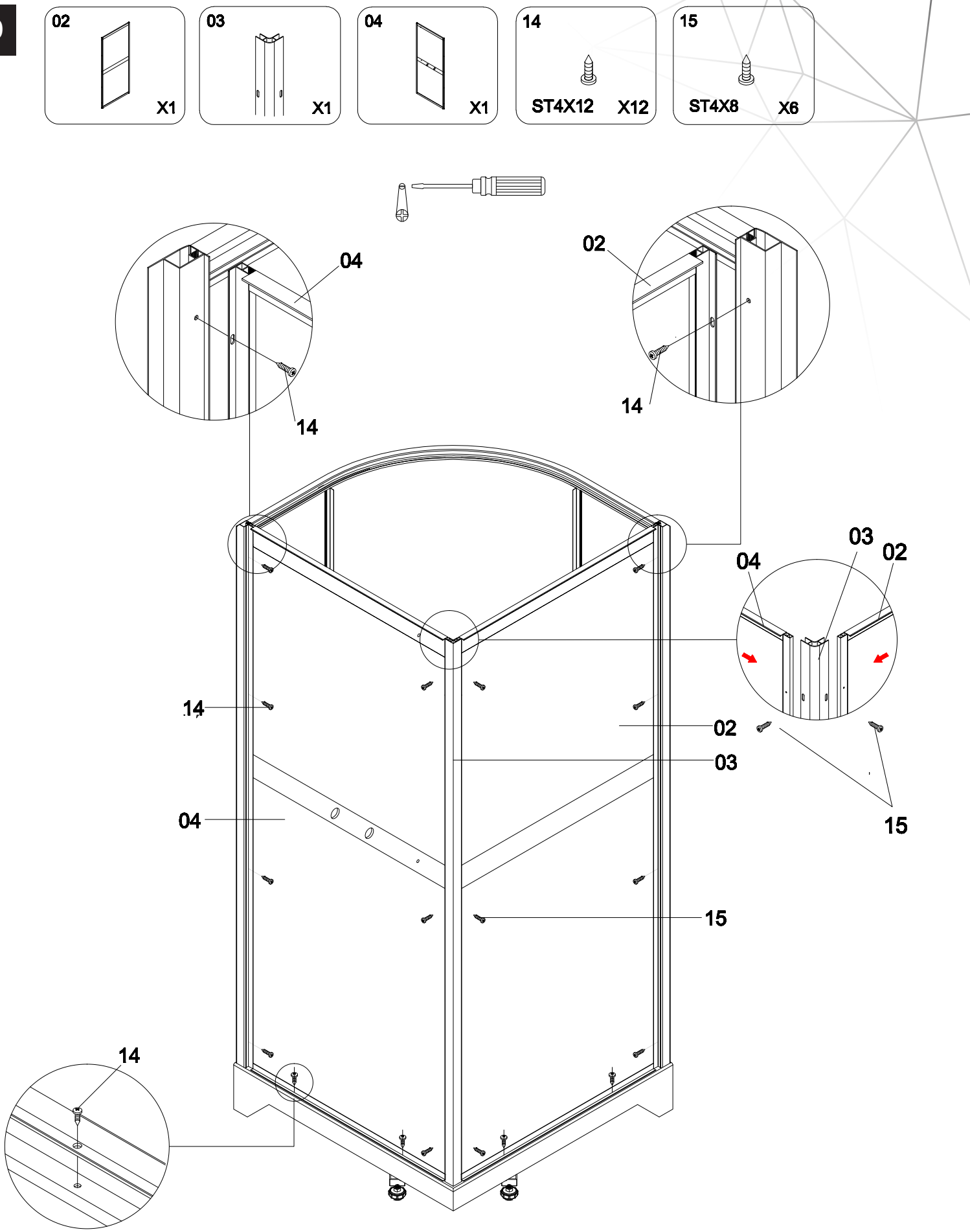

Copyright ©2021 Bygghemma Sverige AB. Original content rights reserved. All product names, logos, and brands are property of their respective owners.

Information contained within this document was considered accurate at the time of publication, but may be subject to revision.

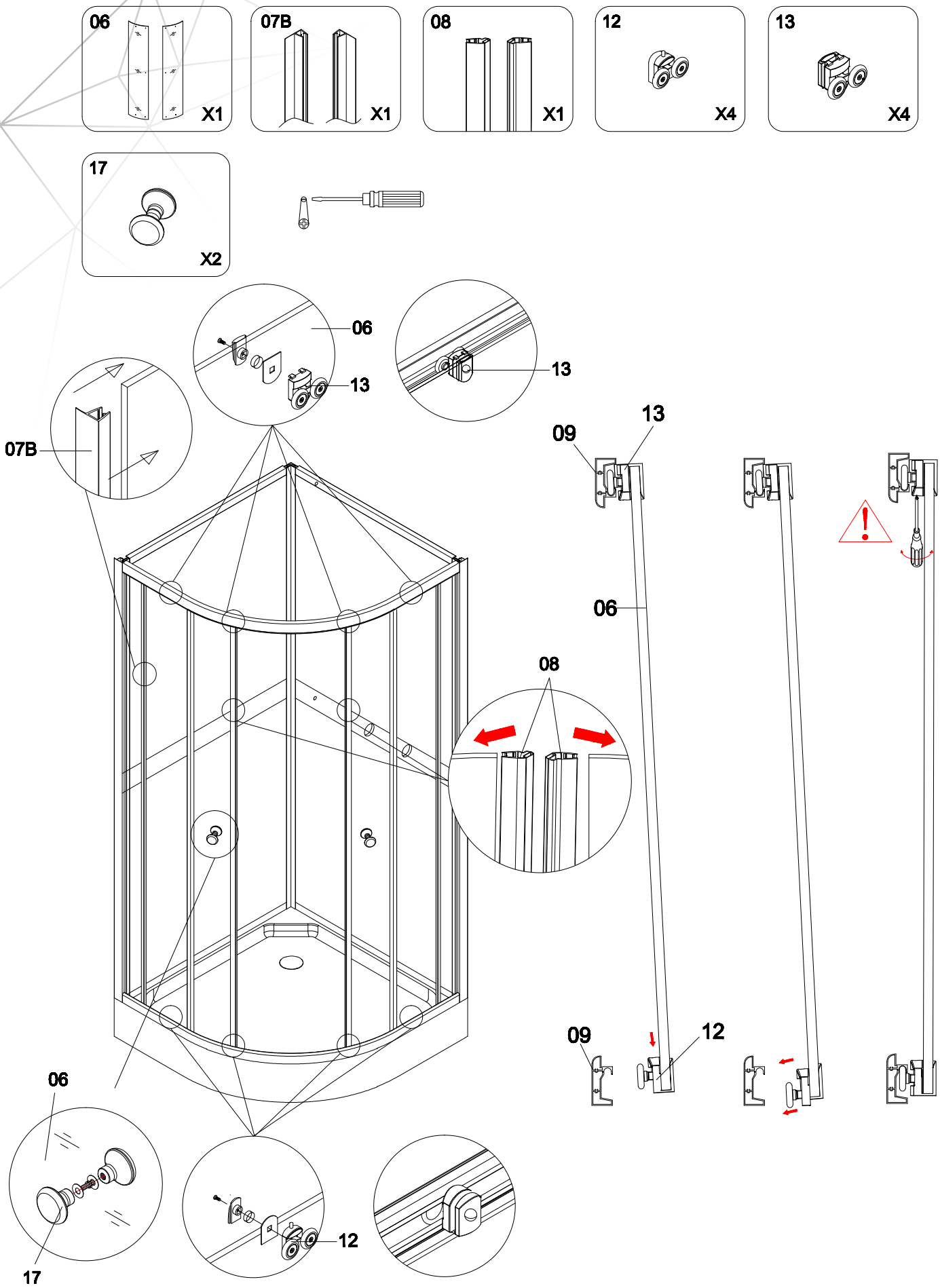

Copyright ©2021 Bygghemma Sverige AB. Original content rights reserved. All product names, logos, and brands are property of their respective owners.

Information contained within this document was considered accurate at the time of publication, but may be subject to revision.

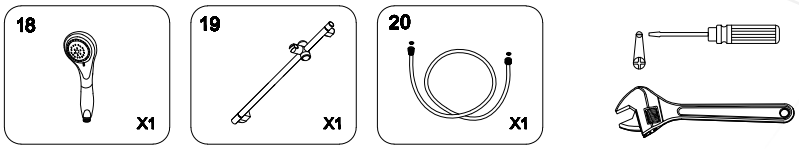

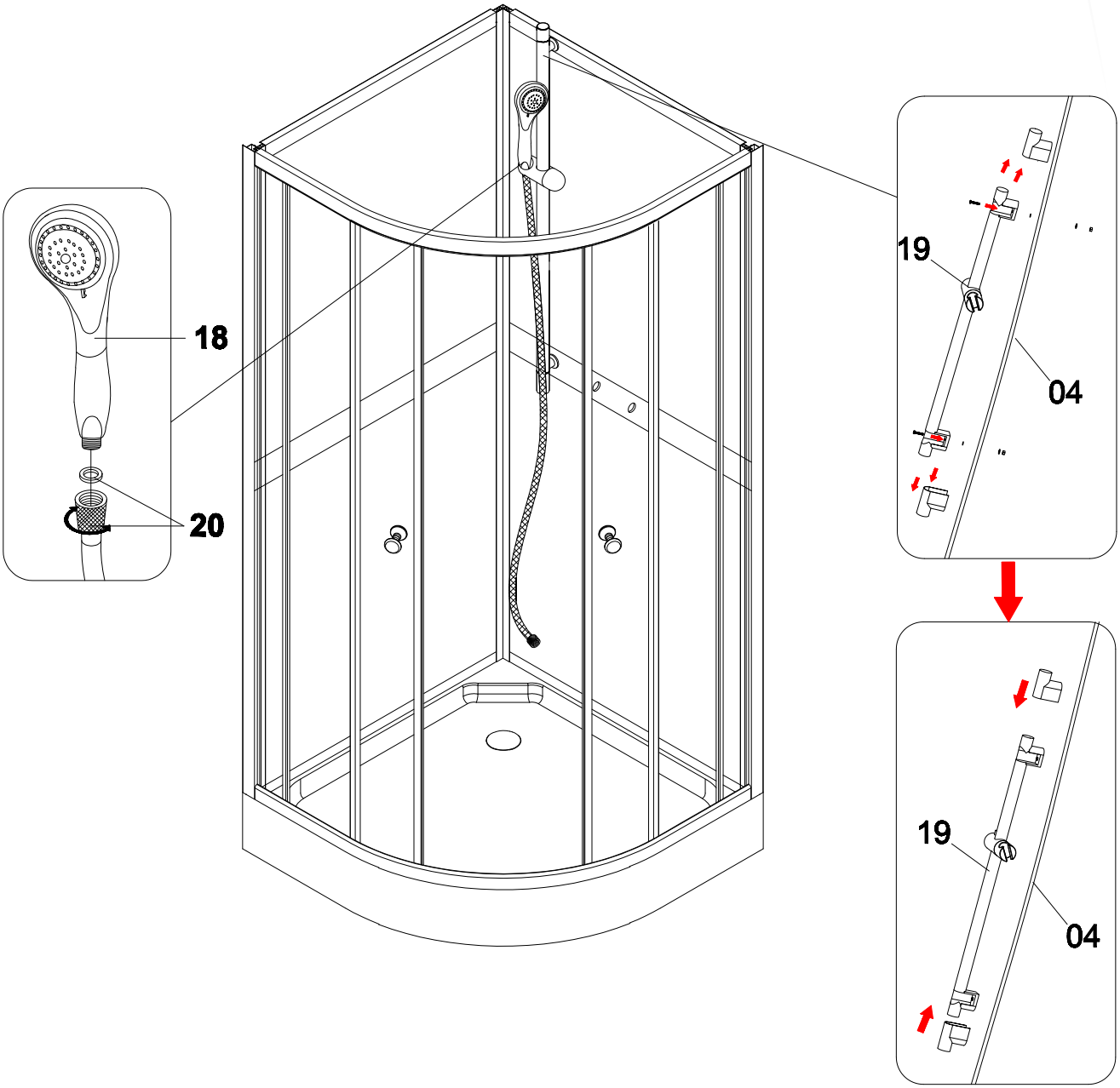

Copyright ©2021 Bygghemma Sverige AB. Original content rights reserved. All product names, logos, and brands are property of their respective owners.

Information contained within this document was considered accurate at the time of publication, but may be subject to revision.

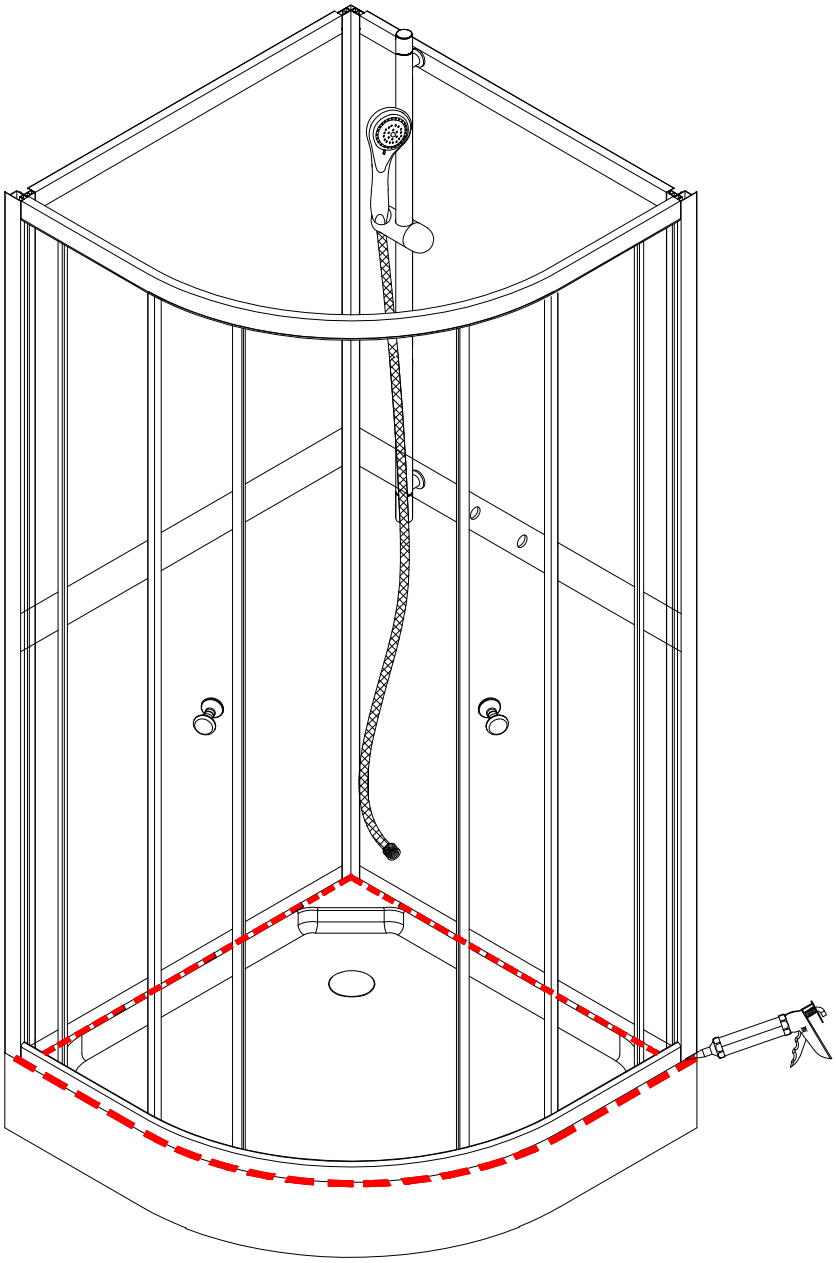

Copyright ©2021 Bygghemma Sverige AB. Original content rights reserved. All product names, logos, and brands are property of their respective owners.

Information contained within this document was considered accurate at the time of publication, but may be subject to revision.

Copyright ©2021 Bygghemma Sverige AB. Original content rights reserved. All product names, logos, and brands are property of their respective owners.

Information contained within this document was considered accurate at the time of publication, but may be subject to revision.